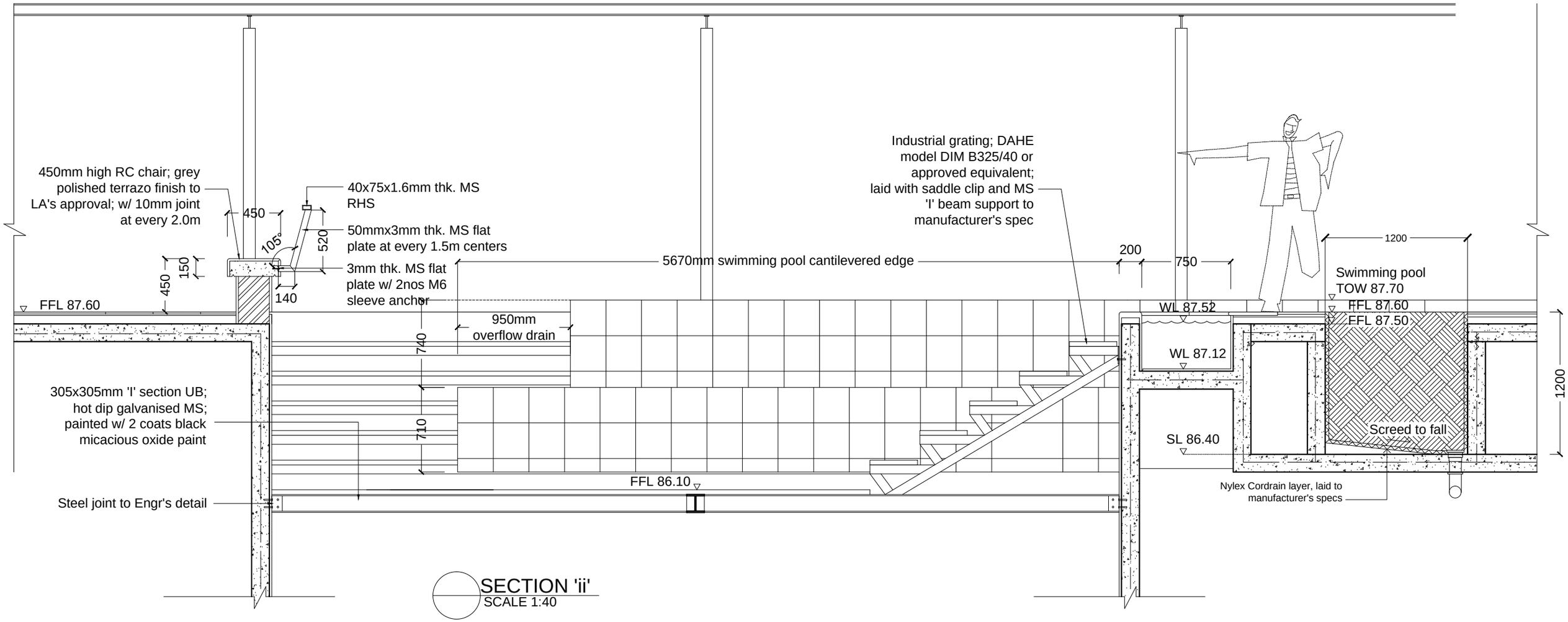

SECTION 'ii'
SCALE 1:40

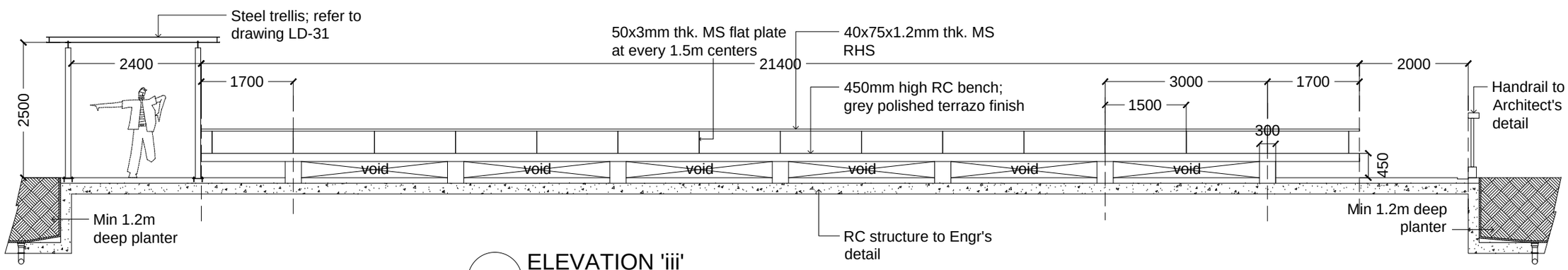

ELEVATION 'iii'
SCALE 1:100

NOTE:
All mild steel members to be hot dip galvanised, painted w/ 1 coat antirust primer & 2 coats of Micacious iron oxide paint: color black to LA's approval.